Cambridge Assessment International Education

Cambridge International AS & A Level

CANDIDATE NAME	

CENTRE NUMBER						CANDIDATE NUMBER				

3171660008

PHYSICS **9702/32**

Paper 3 Advanced Practical Skills 2 **May/June 2023**

2 hours

You must answer on the question paper.

You will need: The materials and apparatus listed in the confidential instructions

INSTRUCTIONS

- Answer **all** questions.
- Use a black or dark blue pen. You may use an HB pencil for any diagrams or graphs.
- Write your name, centre number and candidate number in the boxes at the top of the page.
- Write your answer to each question in the space provided.
- Do **not** use an erasable pen or correction fluid.
- Do **not** write on any bar codes.
- You will be allowed to work with the apparatus for a maximum of 1 hour for each question.
- You should record all your observations in the spaces provided in the question paper as soon as these observations are made.
- You may use a calculator.
- You should show all your working and use appropriate units.

INFORMATION

- The total mark for this paper is 40.
- The number of marks for each question or part question is shown in brackets [ ].

For Examiner's Use	
1	
2	
Total	

This document has **16** pages. Any blank pages are indicated.

DC (RW/SG) 313454/4
© UCLES 2023

[Turn over

You may not need to use all of the materials provided.

1 In this experiment, you will investigate the equilibrium position of a metre rule.

(a) ● Assemble the apparatus as shown in Fig. 1.1.

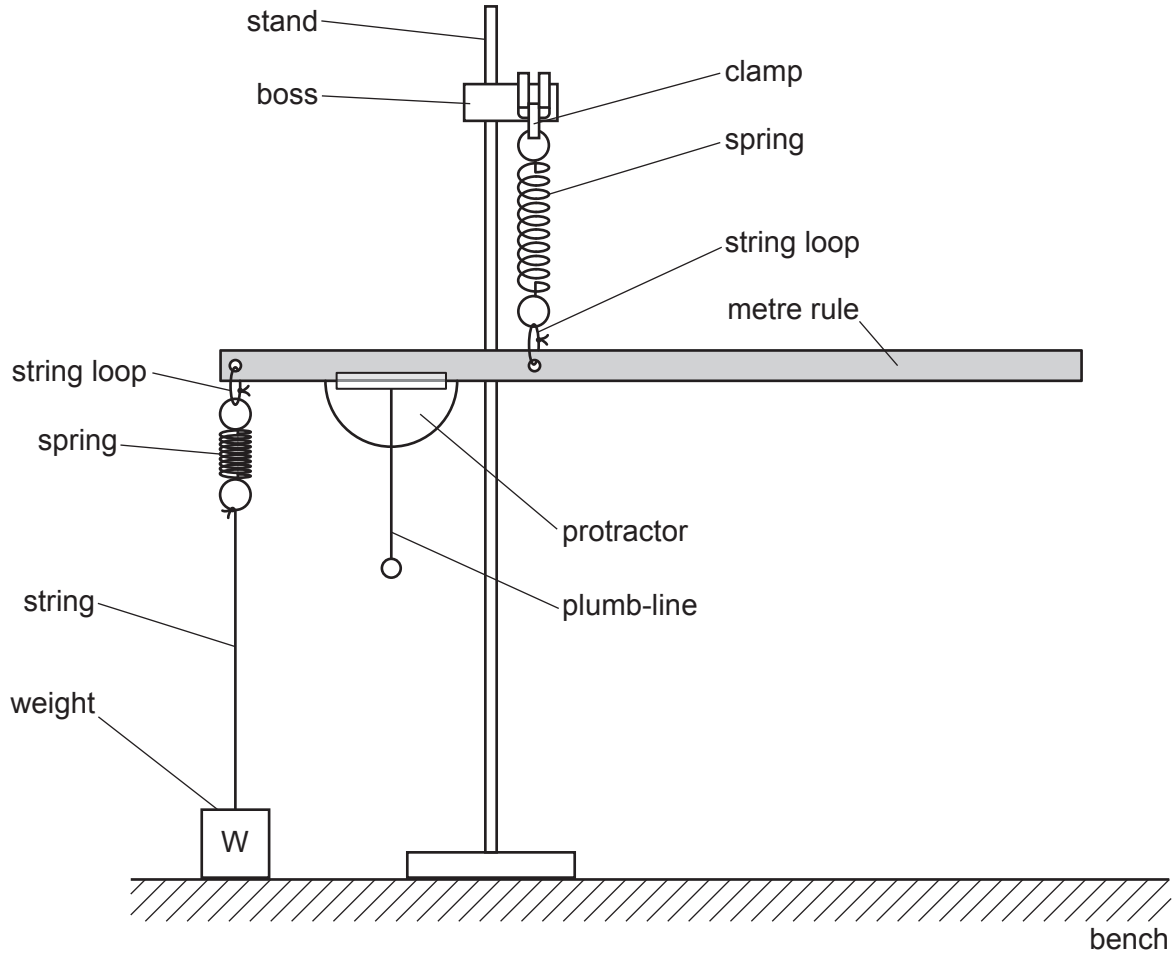

Fig. 1.1

● Adjust the height of the boss and the position of the weight W on the bench so that the metre rule is parallel to the bench and both springs are vertical.

- Slide the rubber band and slotted mass onto the rule so that the rubber band is approximately 30 cm from the end of the rule. The rule will tilt down, as shown in Fig. 1.2.

- Adjust the position of W so that both springs are vertical.

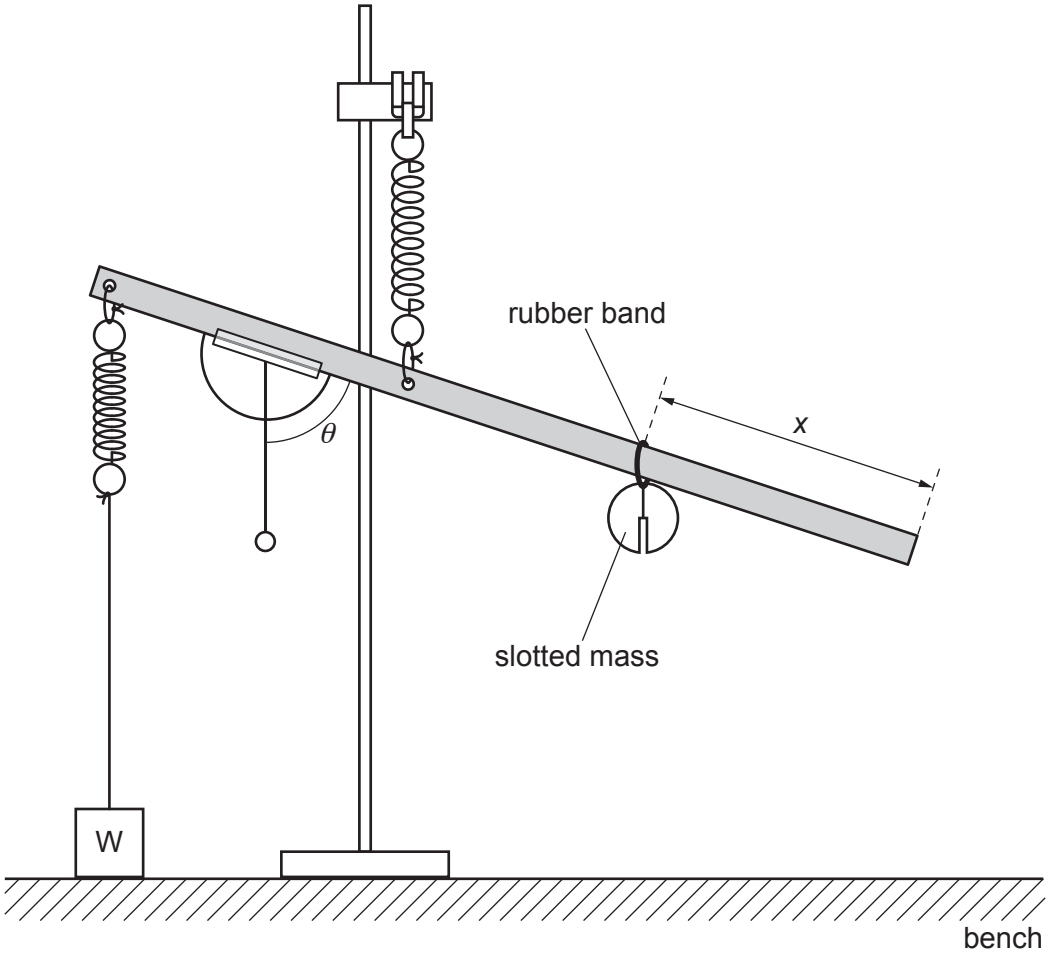

Fig. 1.2

- The distance between the rubber band and the end of the rule is x, as shown in Fig. 1.2.

  Measure and record x.

  x = ...

- The angle indicated by the plumb-line on the protractor scale is θ, as shown in Fig. 1.2.

  Measure and record θ.

  θ = ... °

[2]

(b) Vary x by moving the rubber band along the metre rule. Adjust the position of W so that both springs are vertical. Measure x and θ.

Repeat until you have six sets of values of x and θ.

Record your results in a table. Include values of $\cos\theta$ in your table.

[9]

(c) **(i)** Plot a graph of $\cos\theta$ on the y-axis against x on the x-axis. [3]

(ii) Draw the straight line of best fit. [1]

(iii) Determine the gradient and y-intercept of this line.

gradient = ...

y-intercept = ...

[2]

© UCLES 2023

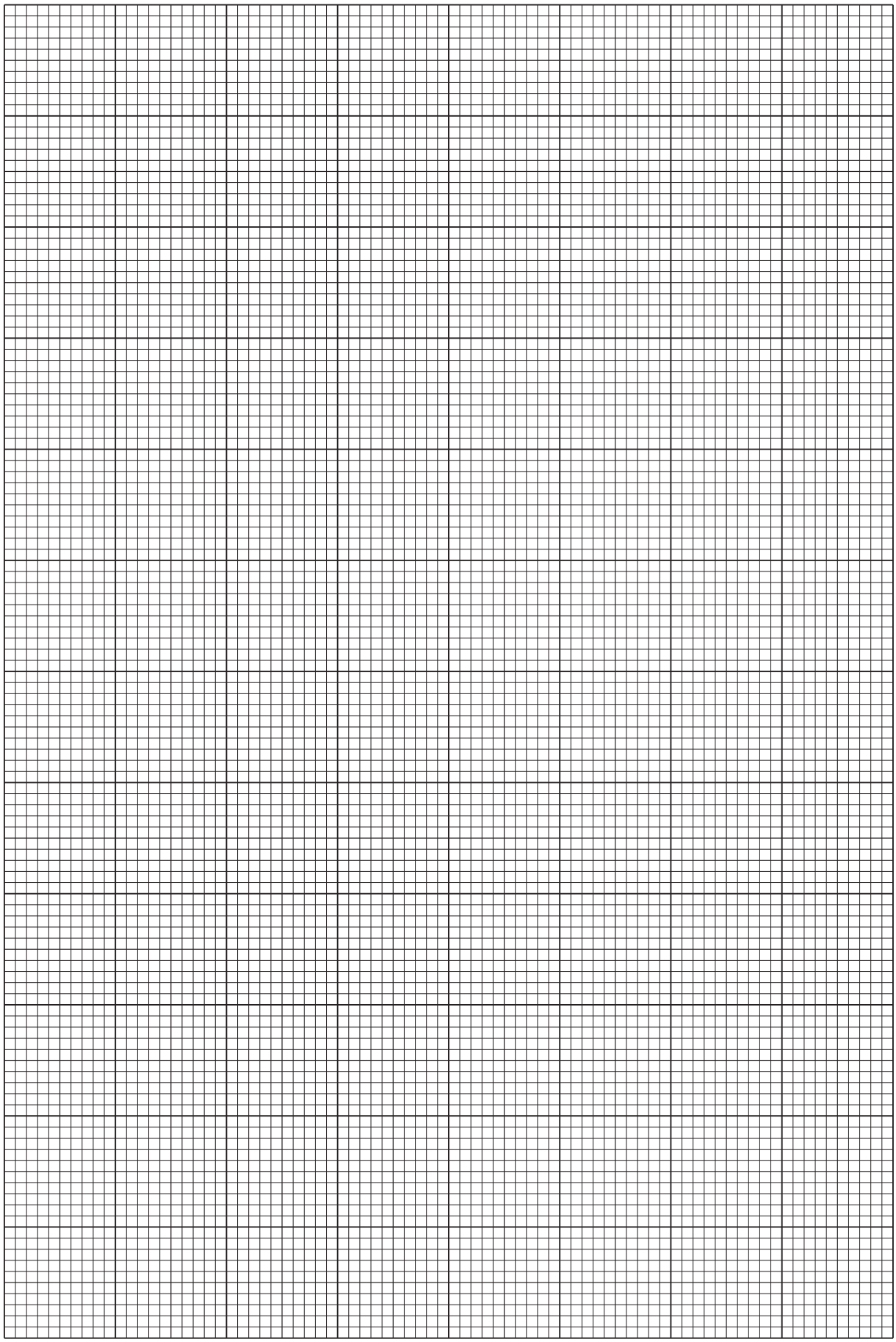

© UCLES 2023

[Turn over

(d) It is suggested that the quantities θ and x are related by the equation

$$\cos\theta = ax + b$$

where a and b are constants.

Using your answers in **(c)(iii)**, determine the values of a and b.
Give appropriate units.

a = ...

b = ...
[2]

(e) For this experiment, the constant a is related to the spring constant S of each spring by

$$a = -\frac{p}{S}$$

where $p = 13.15\,\text{N m}^{-2}$.

Determine the value of S. Give an appropriate unit.

S = ... [1]

[Total: 20]

You may not need to use all of the materials provided.

2 In this experiment, you will investigate the properties of a flywheel.

(a) (i) You are provided with a slotted mass fixed to a length of plastic tube, as shown in Fig. 2.1.

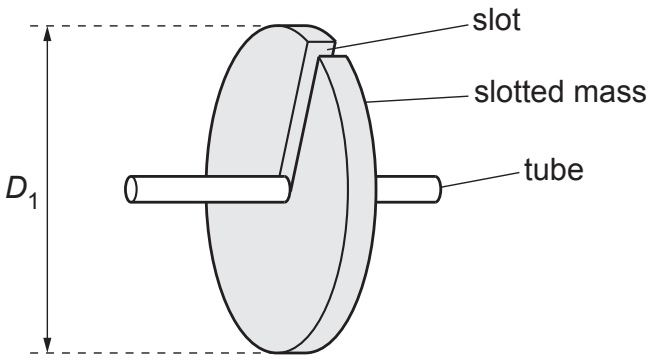

Fig. 2.1

- Measure and record the diameter D_1 of the slotted mass.

D_1 = ... cm

- Calculate C using

$$C = M_1 D_1^2$$

where M_1 = 0.100 kg.

C = ...
[2]

(ii) Justify the number of significant figures that you have given for your value of C.

.....

.....

..... [1]

(iii) ● Assemble the apparatus as shown in Fig. 2.2.

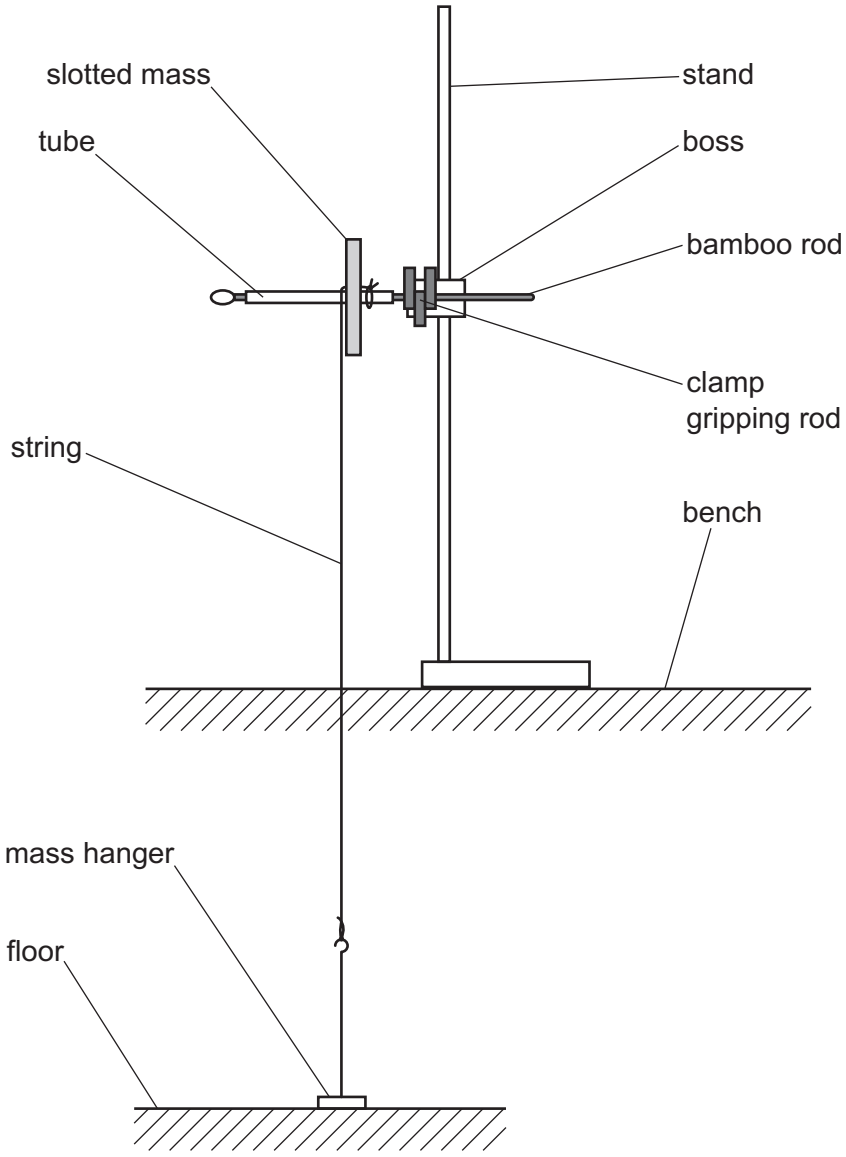

Fig. 2.2

- Pass the string through the slot of the slotted mass and tie it to the tube, as shown in Fig. 2.2.
- Hook the mass hanger onto the other end of the string and then adjust the height of the boss until the mass hanger is just touching the floor.

© UCLES 2023

- Rotate the slotted mass and tube 16 times so that the string is wound around the tube, as shown in Fig. 2.3.

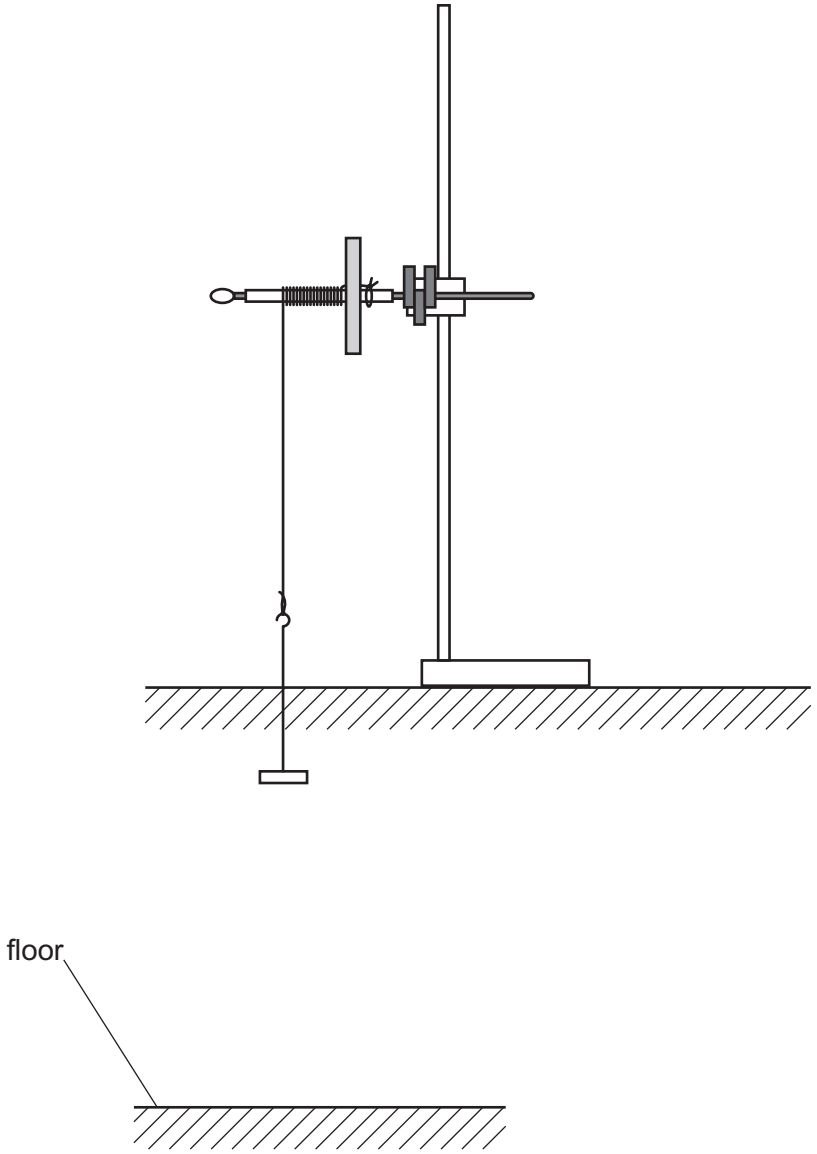

Fig. 2.3

- Release the slotted mass and take measurements to determine the time T for the mass hanger to reach the floor.

T = ... [2]

(b) (i) ● You are provided with modelling clay.

Using **all** the modelling clay, roll the modelling clay into a long cylinder and bend it to form a ring around the outside of the slotted mass, as shown in Fig. 2.4. Ensure it is securely attached to the slotted mass.

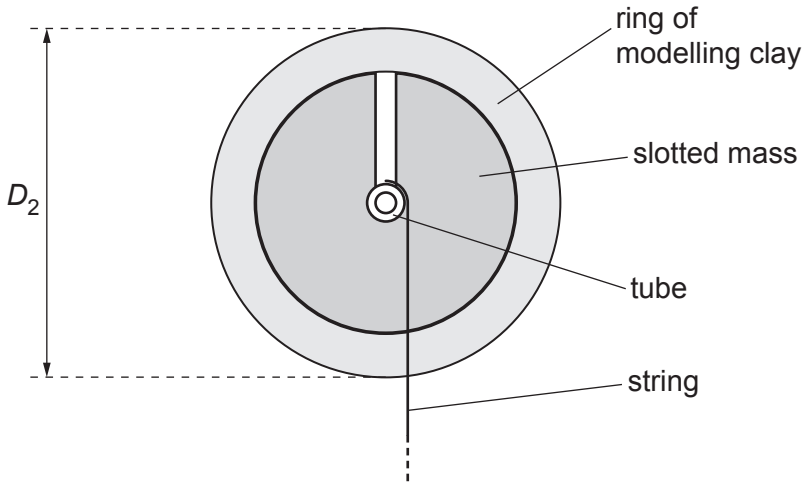

Fig. 2.4

● Measure and record the outside diameter D_2 of the ring of modelling clay, as shown in Fig. 2.4.

D_2 = ... cm [1]

(ii) Estimate the percentage uncertainty in your value of D_2. Show your working.

percentage uncertainty = ...% [1]

© UCLES 2023

(iii) Calculate C using

$$C = M_1 D_1^2 + \frac{M_2(D_2 + D_1)^2}{2}$$

where $M_2 = 0.070\,\text{kg}$.

$C =$ ..... [1]

(iv)
- Rotate the slotted mass and tube 16 times so that the string is wound around the tube, as shown in Fig. 2.3.
- Release the slotted mass and take measurements to determine the time T for the mass hanger to reach the floor.

$T =$ ..... [2]

(c) It is suggested that the relationship between T and C is

$$T^2 = kC$$

where k is a constant.

Using your data, calculate two values of k.

first value of k = ...

second value of k = ...
[1]

(d) It is suggested that the percentage uncertainty in the values of k is 15%.

Using this uncertainty, explain whether your results support the relationship in **(c)**.

.....

.....

.....

..... [1]

(e) (i) Describe **four** sources of uncertainty or limitations of the procedure for this experiment.

For any uncertainties in measurement that you describe, you should state the quantity being measured and a reason for the uncertainty.

1 .....

.....

2 .....

.....

3 .....

.....

4 .....

.....

[4]

(ii) Describe **four** improvements that could be made to this experiment. You may suggest the use of other apparatus or different procedures.

1 .....

.....

2 .....

.....

3 .....

.....

4 .....

.....

[4]

[Total: 20]

© UCLES 2023

BLANK PAGE

© UCLES 2023

BLANK PAGE

© UCLES 2023

BLANK PAGE

Permission to reproduce items where third-party owned material protected by copyright is included has been sought and cleared where possible. Every reasonable effort has been made by the publisher (UCLES) to trace copyright holders, but if any items requiring clearance have unwittingly been included, the publisher will be pleased to make amends at the earliest possible opportunity.

To avoid the issue of disclosure of answer-related information to candidates, all copyright acknowledgements are reproduced online in the Cambridge Assessment International Education Copyright Acknowledgements Booklet. This is produced for each series of examinations and is freely available to download at www.cambridgeinternational.org after the live examination series.

Cambridge Assessment International Education is part of Cambridge Assessment. Cambridge Assessment is the brand name of the University of Cambridge Local Examinations Syndicate (UCLES), which is a department of the University of Cambridge.

© UCLES 2023